THIS DRAWING IS THE PROPERTY OF ANALOG DEVICES INC. IT IS NOT TO BE REPRODUCED OR COPIED, IN WHOLE OR IN PART, OR USED IN FURNISHING INFORMATION TO OTHERS, OR FOR ANY OTHER PURPOSE DETRIMENTAL TO THE INTERESTS OF ANALOG DEVICES.
THE EQUIPMENT SHOWN HEREON MAY BE PROTECTED BY PATENTS OWNED OR CONTROLLED BY ANALOG DEVICES.

RELAY CONTROL CHART

CONTROL	CODE	DEVICE	FUNCTION	CONNECTOR

REVISIONS			
REV	DESCRIPTION	DATE	APPROVED

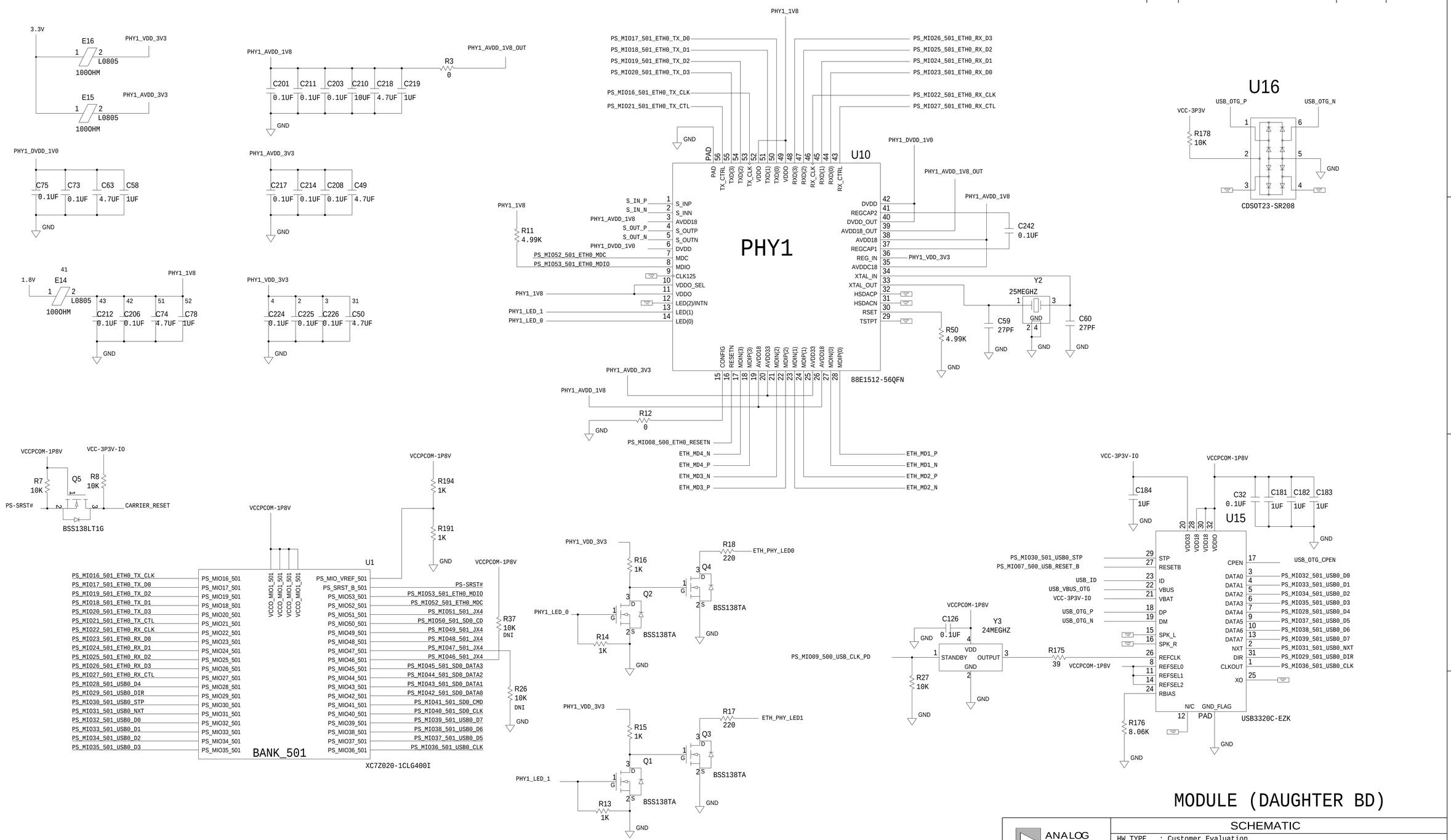

ANALOG DEVICES

SCHEMATIC

HW TYPE : Customer Evaluation
Product(s): AD9364
: Power

THIS DRAWING IS THE PROPERTY OF ANALOG DEVICES INC.
IT IS NOT TO BE REPRODUCED OR COPIED, IN WHOLE OR
IN PART, OR USED IN FURNISHING INFORMATION TO OTHERS,
OR FOR ANY OTHER PURPOSE DETRIMENTAL TO THE INTERESTS
OF ANALOG DEVICES.
THE EQUIPMENT SHOWN HEREON MAY BE PROTECTED BY PATENTS
OWNED OR CONTROLLED BY OWNED ANALOG DEVICES.

DESIGN VIEW	DRAWING NO.	REV
<DESIGN_VIEW>	02_041351	C
PTD ENGINEER <PTD_ENGINEER>	SIZE D / SCALE 1:1	SHEET 2 OF 10

REVISIONS			
REV	DESCRIPTION	DATE	APPROVED

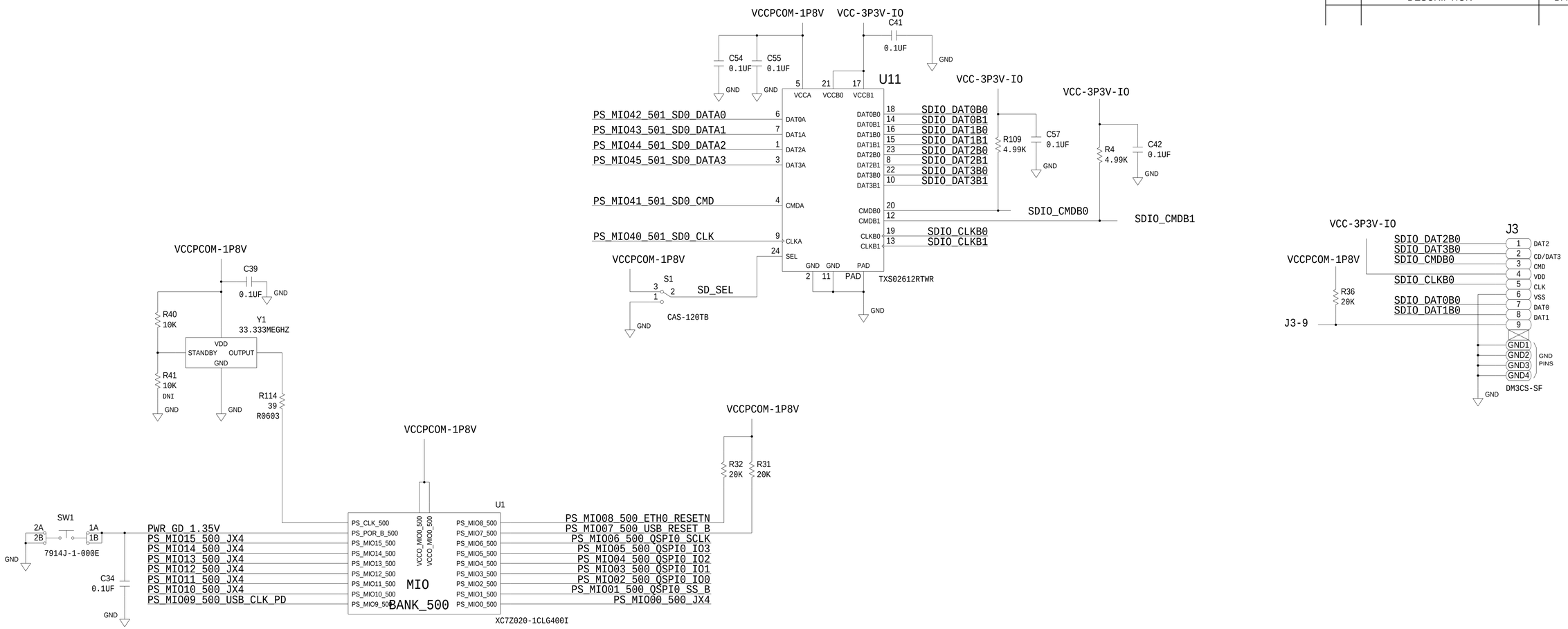

QSPI FLASH

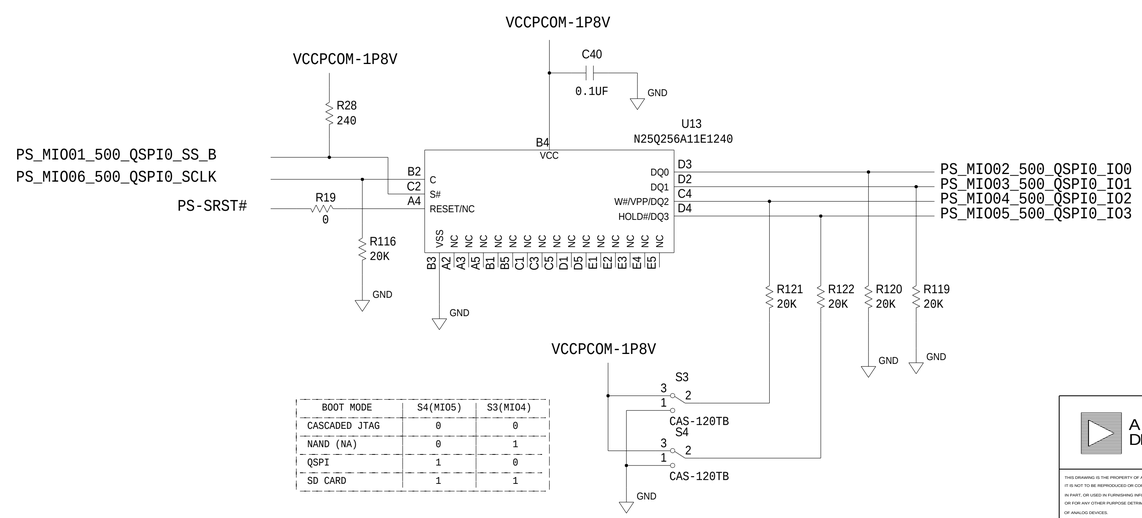

BOOT MODE	S4(MIO5)	S3(MIO4)
CASCADED JTAG	0	0
NAND (NA)	0	1
QSPI	1	0
SD CARD	1	1

QSPI & MICROSD

MODULE (DAUGHTER BD)

ANALOG DEVICES

THIS DRAWING IS THE PROPERTY OF ANALOG DEVICES INC.
IT IS NOT TO BE REPRODUCED OR COPIED, IN WHOLE OR
IN PART, OR USED IN FURNISHING INFORMATION TO OTHERS,
OR FOR ANY OTHER PURPOSE DETRIMENTAL TO THE INTERESTS
OF ANALOG DEVICES.
THE EQUIPMENT SHOWN HEREON MAY BE PROTECTED BY PATENTS
OWNED OR CONTROLLED BY OWNED ANALOG DEVICES.

SCHEMATIC

HW TYPE : Customer Evaluation
Product(s): AD9364
: Power

DESIGN VIEW	DRAWING NO.	REV
<DESIGN_VIEW>	02_041351	C
PTD ENGINEER <PTD_ENGINEER>	SIZE D / SCALE 1:1	SHEET 3 OF 10

REVISIONS			
REV	DESCRIPTION	DATE	APPROVED

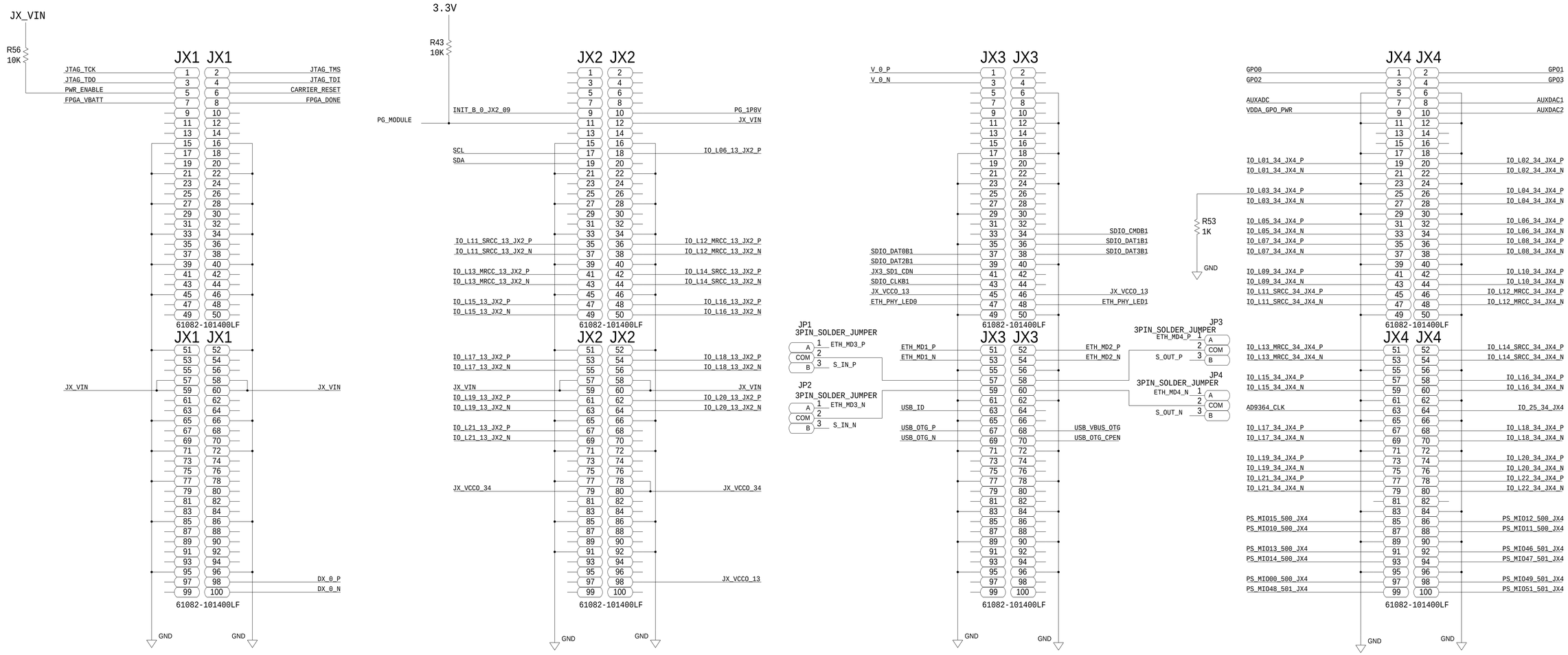

MODULE (DAUGHTER BD)

ANALOG DEVICES

THIS DRAWING IS THE PROPERTY OF ANALOG DEVICES INC.
IT IS NOT TO BE REPRODUCED OR COPIED, IN WHOLE OR
IN PART, OR USED IN FURNISHING INFORMATION TO OTHERS,
OR FOR ANY OTHER PURPOSE DETRIMENTAL TO THE INTERESTS
OF ANALOG DEVICES.
THE EQUIPMENT SHOWN HEREON MAY BE PROTECTED BY PATENTS
OWNED OR CONTROLLED BY OWNED ANALOG DEVICES.

SCHEMATIC

HW TYPE : Customer Evaluation
Product(s): AD9364
: Power

DESIGN VIEW	DRAWING NO.	REV
<DESIGN_VIEW>	02_041351	C

PTD ENGINEER	SIZE	SCALE	SHEET	OF
<PTD_ENGINEER>	D	1:1	4	10

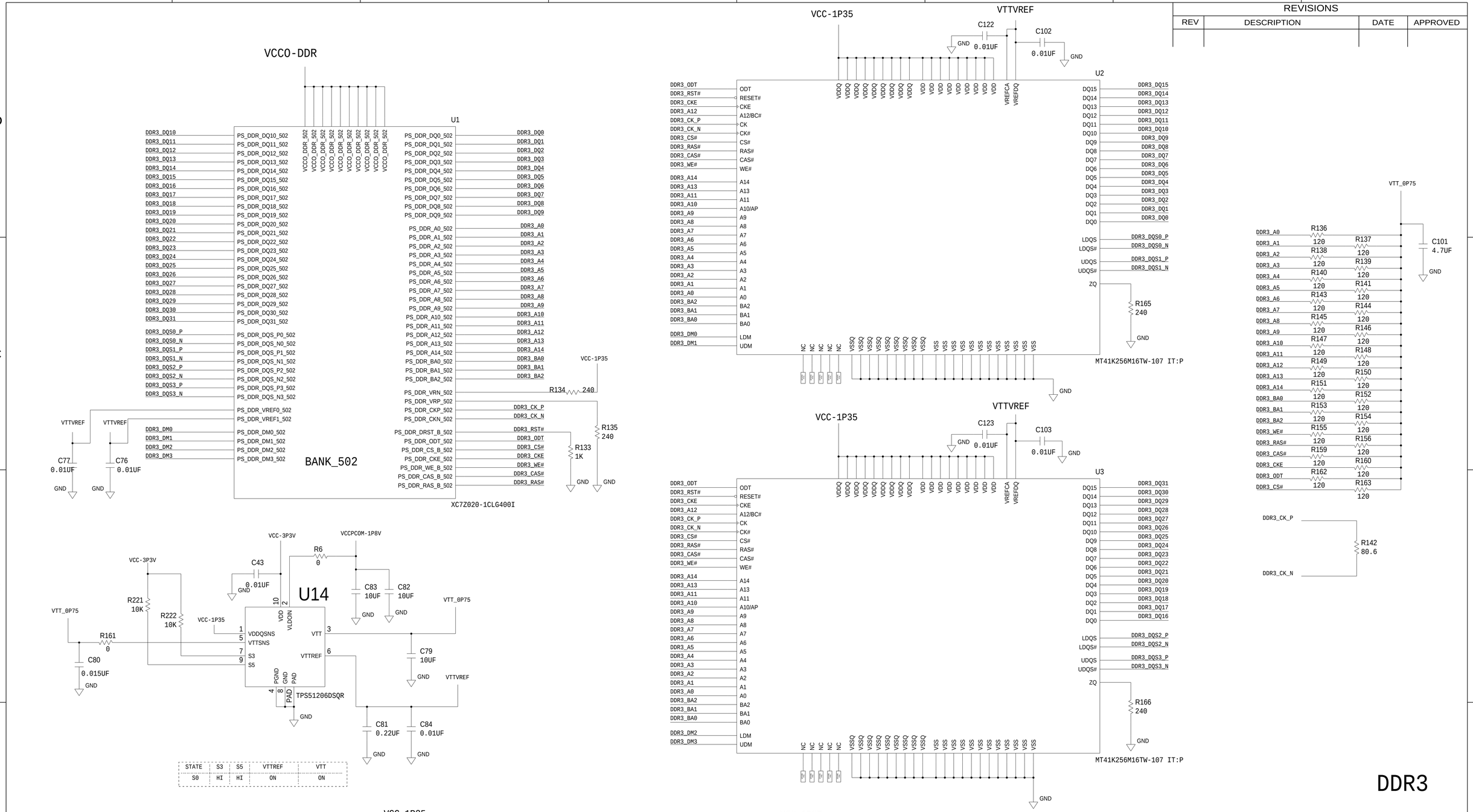

REVISIONS			
REV	DESCRIPTION	DATE	APPROVED

DDR3

MODULE (DAUGHTER BD)

ANALOG DEVICES

THIS DRAWING IS THE PROPERTY OF ANALOG DEVICES INC.
IT IS NOT TO BE REPRODUCED OR COPIED, IN WHOLE OR
IN PART, OR USED IN FURNISHING INFORMATION TO OTHERS,
OR FOR ANY OTHER PURPOSE DETRIMENTAL TO THE INTERESTS
OF ANALOG DEVICES.
THE EQUIPMENT SHOWN HEREON MAY BE PROTECTED BY PATENTS
OWNED OR CONTROLLED BY OWNED ANALOG DEVICES.

SCHEMATIC

HW TYPE : Customer Evaluation
Product(s): AD9364
: Power

DESIGN VIEW	DRAWING NO.	REV
<DESIGN_VIEW>	02_041351	C

PTD ENGINEER	SIZE	SCALE	SHEET
<PTD_ENGINEER>	D	1:1	5 OF 10

REVISIONS			
REV	DESCRIPTION	DATE	APPROVED

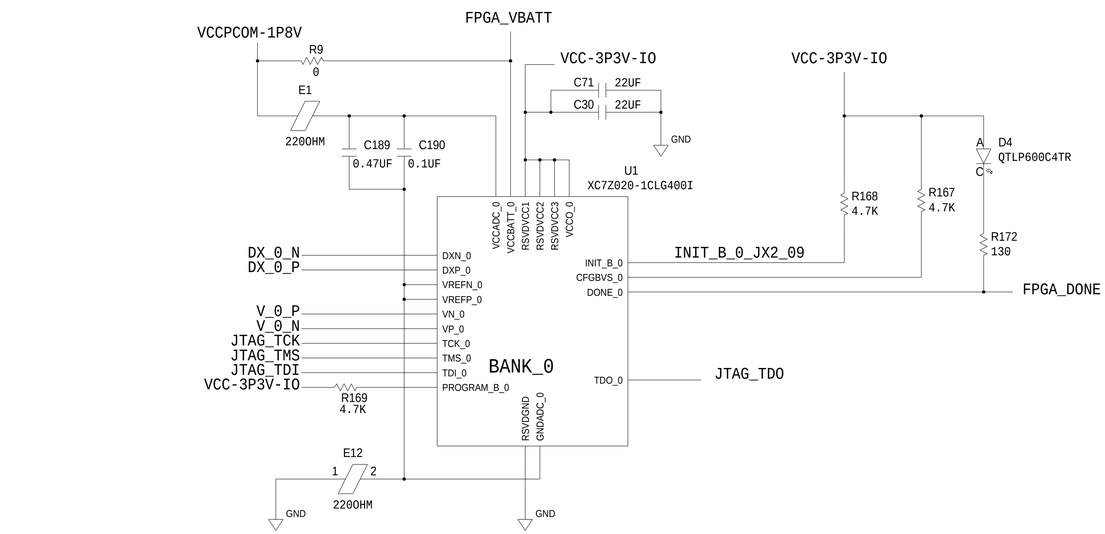

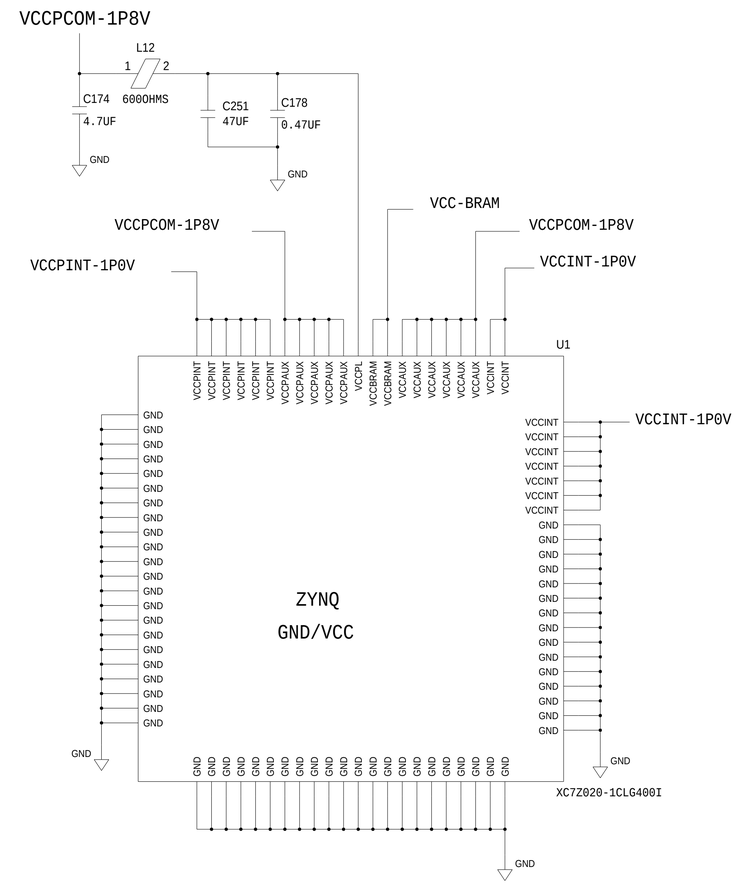

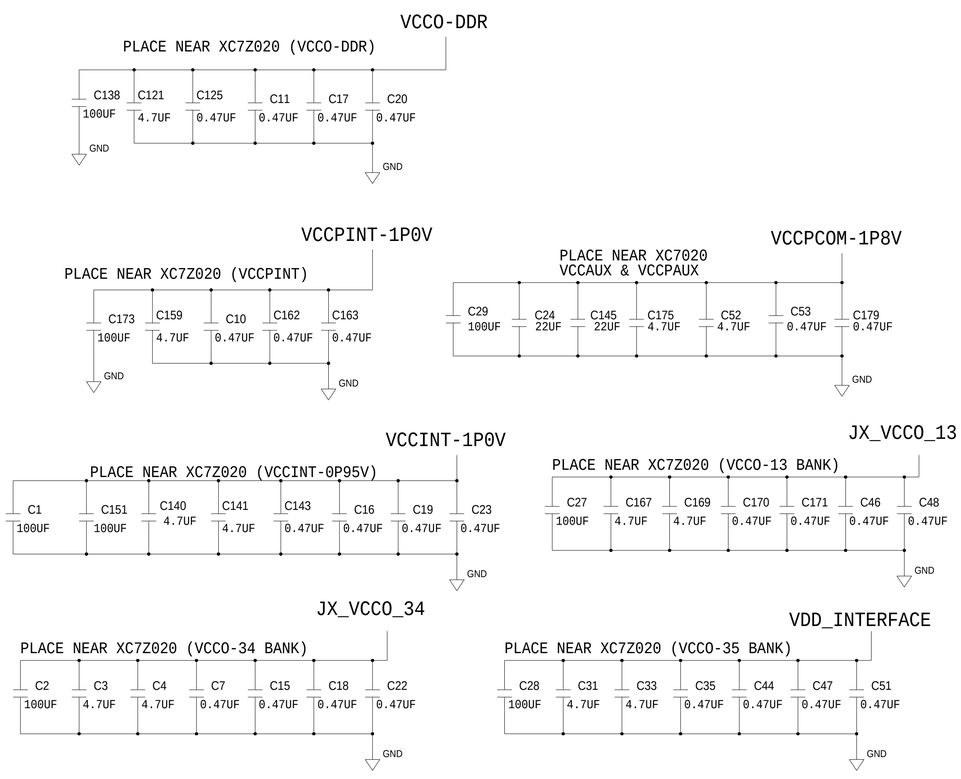

XILINX

MODULE (DAUGHTER BD)

ANALOG DEVICES

THIS DRAWING IS THE PROPERTY OF ANALOG DEVICES INC.
IT IS NOT TO BE REPRODUCED OR COPIED, IN WHOLE OR
IN PART, OR USED IN FURNISHING INFORMATION TO OTHERS,
OR FOR ANY OTHER PURPOSE DETRIMENTAL TO THE INTERESTS
OF ANALOG DEVICES.
THE EQUIPMENT SHOWN HEREON MAY BE PROTECTED BY PATENTS
OWNED OR CONTROLLED BY OWNED ANALOG DEVICES.

SCHEMATIC

HW TYPE : Customer Evaluation
Product(s): AD9364
: Power

DESIGN VIEW	DRAWING NO.	REV
<DESIGN_VIEW>	02_041351	C

PTD ENGINEER	SIZE	SCALE	SHEET	OF
<PTD_ENGINEER>	D	1:1	6	10

REVISIONS			
REV	DESCRIPTION	DATE	APPROVED

JX_VCCO_13

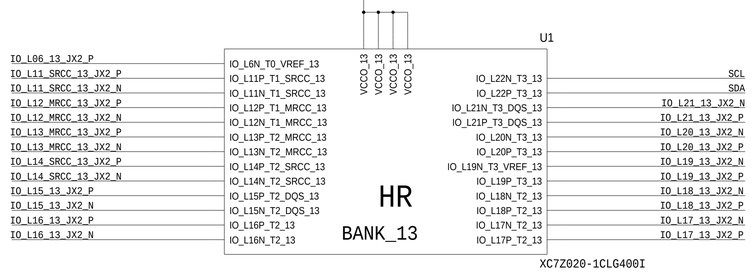

VDD_INTERFACE

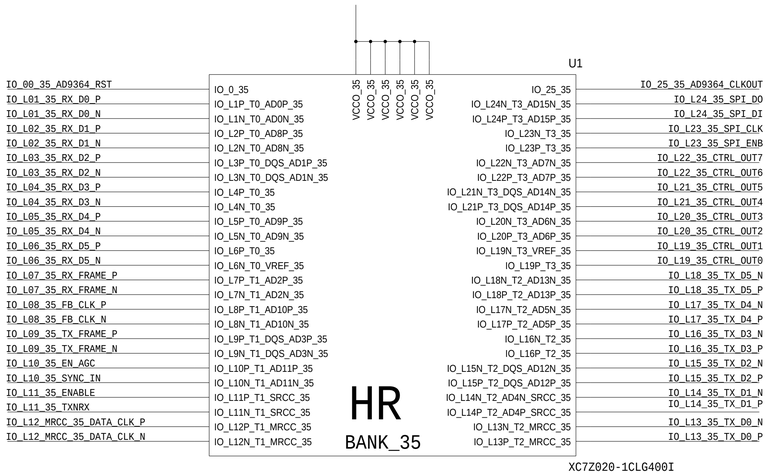

JX_VCCO_34

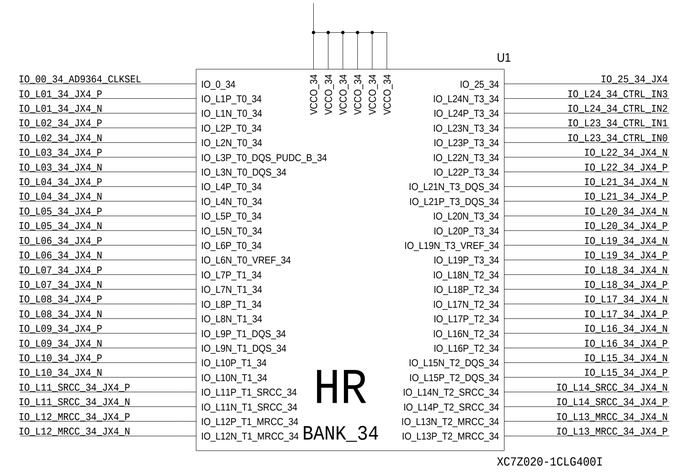

XILINX
MODULE (DAUGHTER BD)

ANALOG DEVICES

THIS DRAWING IS THE PROPERTY OF ANALOG DEVICES INC.
IT IS NOT TO BE REPRODUCED OR COPIED, IN WHOLE OR
IN PART, OR USED IN FURNISHING INFORMATION TO OTHERS,
OR FOR ANY OTHER PURPOSE DETRIMENTAL TO THE INTERESTS
OF ANALOG DEVICES.
THE EQUIPMENT SHOWN HEREON MAY BE PROTECTED BY PATENTS
OWNED OR CONTROLLED BY OWNED ANALOG DEVICES.

SCHEMATIC

HW TYPE : Customer Evaluation
Product(s): AD9364
: Power

DESIGN VIEW	DRAWING NO.	REV
<DESIGN_VIEW>	02_041351	C

PTD ENGINEER	SIZE	SCALE	SHEET	OF
<PTD_ENGINEER>	D	1:1	7	10

REVISIONS			
REV	DESCRIPTION	DATE	APPROVED

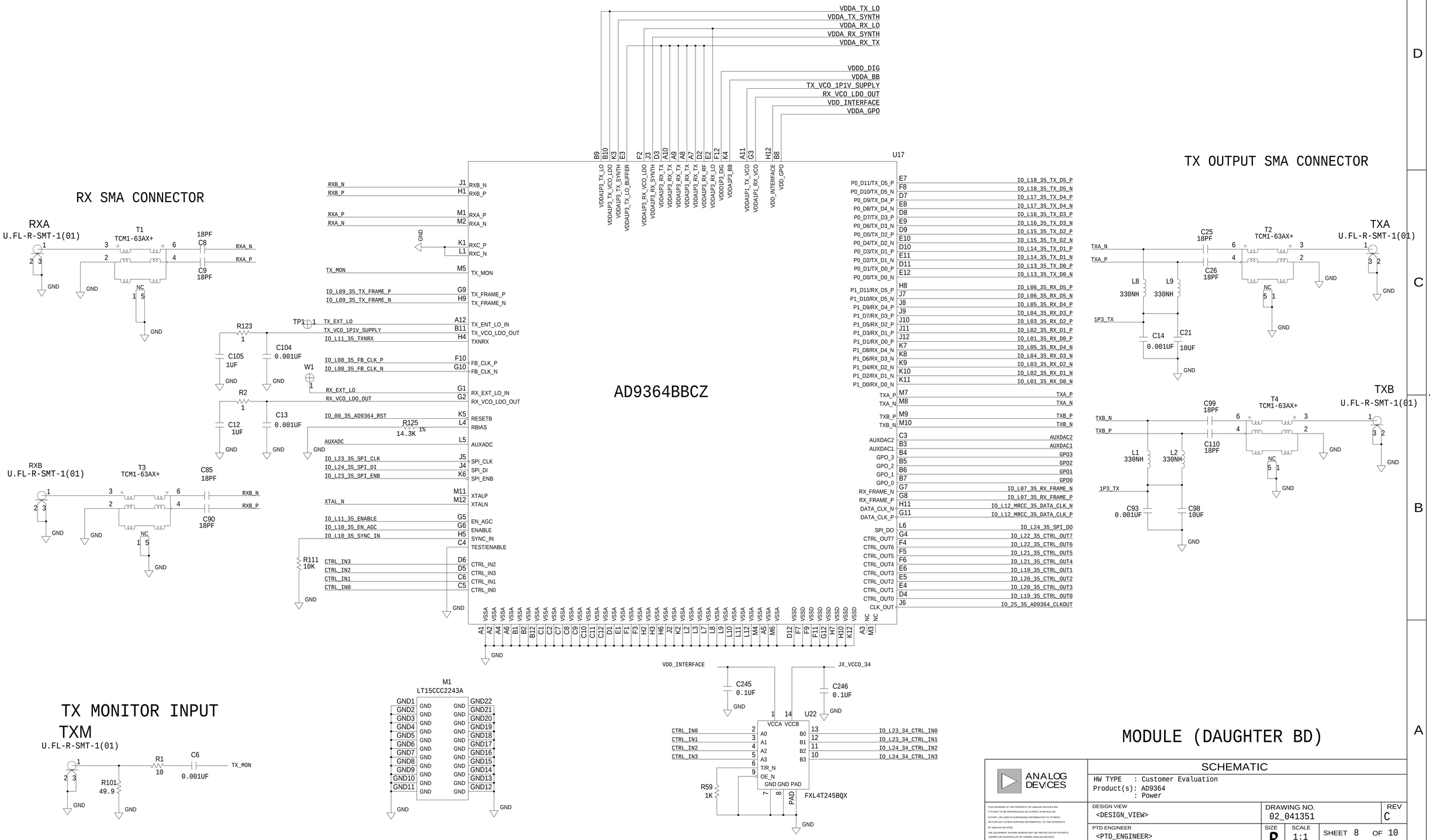

ANALOG DEVICES

THIS DRAWING IS THE PROPERTY OF ANALOG DEVICES INC.
IT IS NOT TO BE REPRODUCED OR COPIED, IN WHOLE OR
IN PART, OR USED IN FURNISHING INFORMATION TO OTHERS,
OR FOR ANY OTHER PURPOSE DETRIMENTAL TO THE INTERESTS
OF ANALOG DEVICES.
THE EQUIPMENT SHOWN HEREON MAY BE PROTECTED BY PATENTS
OWNED OR CONTROLLED BY OWNED ANALOG DEVICES.

SCHEMATIC

HW TYPE : Customer Evaluation
Product(s): AD9364
: Power

DESIGN VIEW	DRAWING NO.	REV
<DESIGN_VIEW>	02_041351	C

PTD ENGINEER	SIZE	SCALE	SHEET	OF
<PTD_ENGINEER>	D	1:1	8	10

POWER MANAGEMENT SECTION

REVISIONS			
REV	DESCRIPTION	DATE	APPROVED

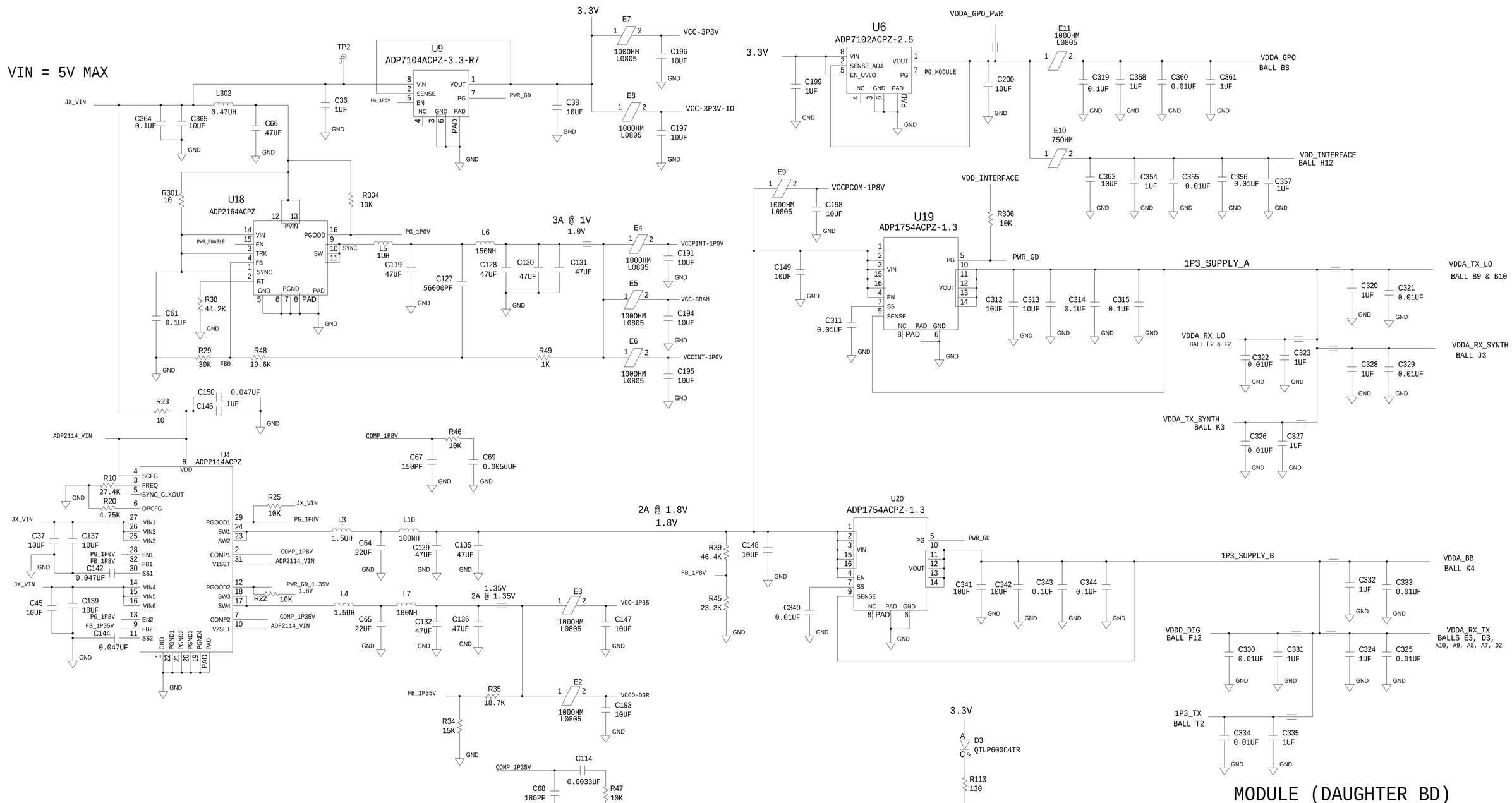

MODULE (DAUGHTER BD)

ANALOG DEVICES

THIS DRAWING IS THE PROPERTY OF ANALOG DEVICES INC.
IT IS NOT TO BE REPRODUCED OR COPIED, IN WHOLE OR
IN PART, OR USED IN FURNISHING INFORMATION TO OTHERS,
OR FOR ANY OTHER PURPOSE DETRIMENTAL TO THE INTERESTS
OF ANALOG DEVICES.
THE EQUIPMENT SHOWN HEREON MAY BE PROTECTED BY PATENTS
OWNED OR CONTROLLED BY OWNED ANALOG DEVICES.

SCHEMATIC

HW TYPE : Customer Evaluation
Product(s): AD9364
: Power

DESIGN VIEW	DRAWING NO.	REV
<DESIGN_VIEW>	02_041351	C

PTD ENGINEER	SIZE	SCALE	SHEET	OF
<PTD_ENGINEER>	D	1:1	9	10

REVISIONS			
REV	DESCRIPTION	DATE	APPROVED

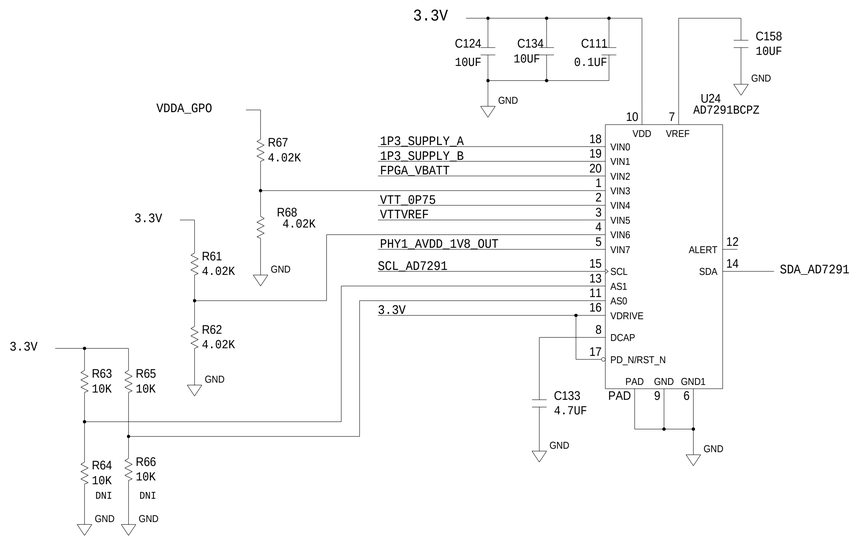

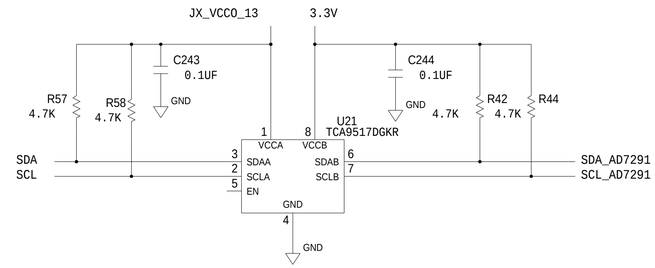

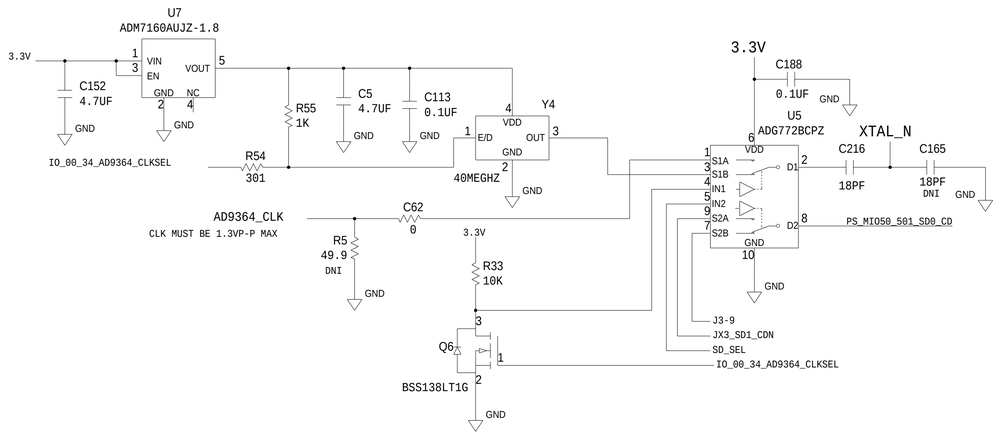

ANALOG DEVICES

THIS DRAWING IS THE PROPERTY OF ANALOG DEVICES INC.
IT IS NOT TO BE REPRODUCED OR COPIED, IN WHOLE OR
IN PART, OR USED IN FURNISHING INFORMATION TO OTHERS,
OR FOR ANY OTHER PURPOSE DETRIMENTAL TO THE INTERESTS
OF ANALOG DEVICES.
THE EQUIPMENT SHOWN HEREON MAY BE PROTECTED BY PATENTS
OWNED OR CONTROLLED BY OWNED ANALOG DEVICES.

SCHEMATIC

HW TYPE : Customer Evaluation
Product(s): AD9364
: Power

DESIGN VIEW	DRAWING NO.	REV
<DESIGN_VIEW>	02_041351	C

PTD ENGINEER	SIZE	SCALE	SHEET
<PTD_ENGINEER>	D	1:1	10 OF 10